One-piece Structure
Standard Flat Spray Nozzles

VVP/VP

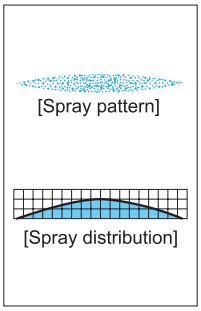

[Features]
- Flat spray pattern with a mountain-shaped spray distribution having gradually tapered edges.
- Tapered edges overlap to provide uniformity of spray distribution in multiple-nozzle arrangements.

[Standard pressure]
0.3 MPa

[Applications]
Cleaning: Automotives, containers, films, felts, filters, screens, bottles, crushed stones, earth and sand, metal parts, machines, steel plates and pieces
Spraying: Etchants, oils, lubricants, liquids, solutions, insecticides, herbicides
Cooling: Gas, smokes, heat exchangers, tanks, steels, roofs
Water screen: Fire protection, heat protection, dust suppression, deodorization

VVP series

	VVP series
Structure	• Made of metal or plastic, one-piece structure. • Small spray capacity models of metal VVP come with or without a strainer.
Material	• S303, B (brass), or PP • S316L equivalent (precision-molded stainless steel)*3 • Strainer for precision-molded stainless steel: S303 or S316 • Optional material: S316, PVC, PVDF, Ultrahigh molecular weight polyethylene, or others

Series	Pipe conn. size	Dimensions (mm)					Mass (g)*1			
		L1	L2	H	øD	N	S303	B	S316L equiv.	PP
VVP*2	R1/8	18.5	31	12	7.5	6.5	10	11	—	—
	R1/4	25	40	14	10	10.5	21	23	—	—
	R3/8	30	—	19	—	10.5	37	40	—	—
	R1/2	38	—	23	—	14	65	70	—	—
	R3/4	45	—	29	—	15	110	120	—	—
	R1	55	—	35	—	18	170	180	—	—
VVP*3 (Precision-molded stainless steel)	R1/8	20	33.5	12	7.5	7	—	—	9.6	—
	R1/4	27	41	14	10	10.5	—	—	16	—
VVP-PP (Injection molded)	R1/8	22	—	12	—	8.5	—	—	—	1.1
	R1/4	27	—	14	—	11.5	—	—	—	2.2

*1) When with a strainer, add 2–5 g to the above mass.
*2) VVP with spray capacity code of 20 or smaller slightly differs in dimensions (L1, L2) and in shape of nozzle tip from the above. Contact us for details.
*3) Please see the chart on page 20 for availability.
[Note] Appearance and dimensions may differ slightly depending on materials and nozzle codes.

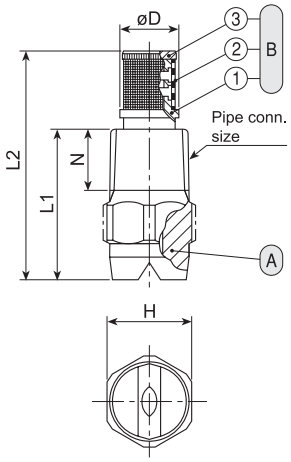

PP Injection molded

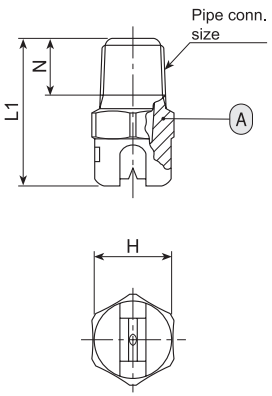

Ⓐ **Nozzle**
Ⓑ **Strainer** (①Strainer holder ②Strainer screen [S316] ③Strainer cap)

Precision-molded stainless steel

R1/8

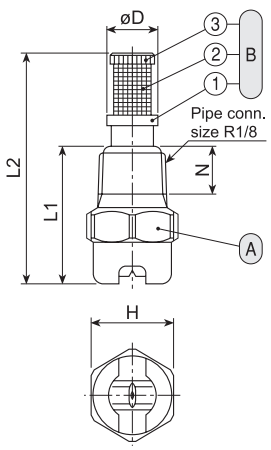

R1/4

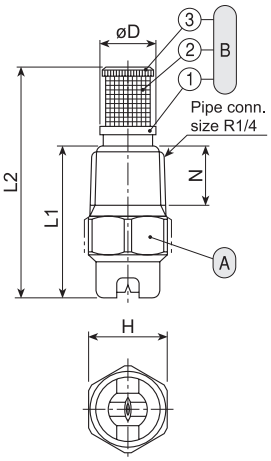

Ⓐ **Nozzle**
Ⓑ **Strainer** (①Strainer holder ②Strainer screen [S316] ③Strainer cap)

VP series

	VP series (with ceramic orifice inserted)
Structure	• Ceramic orifice is inserted and adhered into a metal or plastic body. • Small spray capacity models of metal VP come with or without a strainer. • CERTIIM® is a plastic spray nozzle with a one-shot injection molded ceramic orifice.
Material	• Nozzle orifice: ceramic • Metal parts: S303 or B (brass) • CERTIIM®'s plastic body: PVDF • Optional material: S316 or others

Body material	Pipe conn. size	Dimensions (mm)					Mass (g)*1		
		L1	L2	H	øD	N	S303	B	CER-TIIM®
Metal	R1/8	16.5	30	12	7.5	6.5	8	9	—
	R1/4	26	40	14	10	10.5	20	22	—
PVDF (CERTIIM®)	R1/8	22	—	12	—	8.5	—	—	2.1
	R1/4	26	—	14	—	10.5	—	—	6

*1) When with a strainer, add 2–5 g to the above mass.

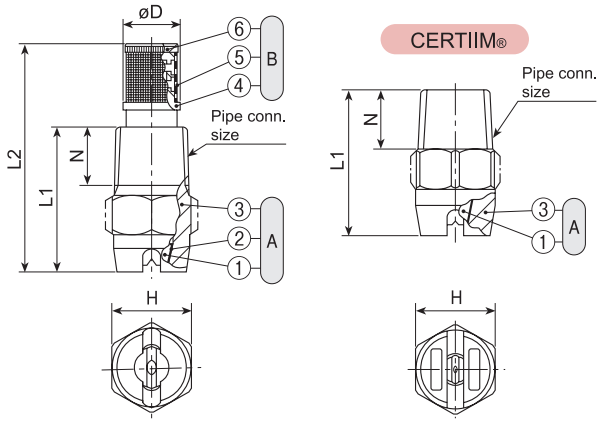

Ⓐ **Nozzle** (①Ceramic orifice ②Adhesive: Araldite® ③Nozzle body)
Ⓑ **Strainer** (④Strainer holder ⑤Strainer screen [S316] ⑥Strainer cap)

[Note] Appearance and dimensions may differ slightly depending on materials and nozzle codes.

■ VVP series, VP series

Spray angle code	Spray capacity code	Pipe connection size: VVP All metal R1/8	VVP All metal R1/4	VVP All metal R3/8	VVP All metal R1/2	VVP All metal R3/4	VVP All metal R1	VVP All plastic R1/8	VVP All plastic R1/4	VP Metal R1/8	VP Metal R1/4	VP CER-TIIM® R1/8	VP CER-TIIM® R1/4	Spray angle (°) 0.15 MPa	0.3 MPa	0.7 MPa	Spray capacity (ℓ/min) 0.05 MPa	0.1 MPa	0.15 MPa	0.2 MPa	0.3 MPa	0.5 MPa	0.7 MPa	1 MPa	2 MPa	Mean drop. dia. (μm)	Free pass. dia. (mm)	Strainer mesh size
115	03							○	○	●	●	○	○	101	115	124	—	0.17	0.21	0.24	0.30	0.39	0.46	0.55	0.77	140	0.2	200
	04							○	○	●	●	○	○	102	115	124	—	0.23	0.28	0.33	0.40	0.52	0.61	0.73	1.03	∫	0.2	200
	05							○	○	●	●	○	○	102	115	124	—	0.29	0.35	0.41	0.50	0.65	0.76	0.91	1.29	160	0.3	150
	07							○	○	●	●	○	○	103	115	124	—	0.40	0.49	0.57	0.70	0.90	1.07	1.28	1.81	∫	0.3	150
	10							○	○	●	●	○	○	103	115	124	0.41	0.58	0.71	0.82	1.00	1.29	1.53	1.83	2.58		0.4	150
	15	●	●					○	○	●	●	○	○	104	115	123	0.61	0.87	1.06	1.23	1.50	1.94	2.29	2.74	3.87		0.5	100
	20	●	●					○	○		●		○	104	115	123	0.82	1.15	1.41	1.63	2.00	2.58	3.06	3.65	5.16	270	0.6	100
	30	●	●					○	○		●		○	105	115	122	1.23	1.73	2.12	2.45	3.00	3.88	4.58	5.48	7.75		0.8	50
	40	●	●					○	○					106	115	122	1.63	2.31	2.83	3.27	4.00	5.16	6.11	7.30	10.3		0.8	50
	60	○	○											107	115	121	2.45	3.46	4.24	4.90	6.00	7.75	9.17	11.0	15.5	∫	1.0	—
	80	○	○											107	115	121	3.27	4.62	5.66	6.53	8.00	10.3	12.2	14.6	20.6		1.2	—
	100		○											107	115	120	4.08	5.77	7.07	8.17	10.0	12.9	15.3	18.3	25.8		1.7	—
	200		○											109	115	120	8.16	11.5	14.1	16.3	20.0	25.8	30.6	36.5	51.6	510	2.4	—
	230			○										109	115	119	9.39	13.3	16.3	18.8	23.0	29.7	35.1	42.0	59.4		2.7	—
	260			○										109	115	119	10.6	15.0	18.4	21.2	26.0	33.6	39.7	47.5	67.1	∫	2.8	—
	300			○										109	115	119	12.2	17.3	21.2	24.5	30.0	38.7	45.8	54.8	77.5		3.0	—
	400				○									110	115	118	16.3	23.1	28.3	32.7	40.0	51.6	61.1	73.0	103	580	3.5	—
	500				○									110	115	118	20.4	28.9	35.4	40.8	50.0	64.6	76.4	91.3	129	∫	3.9	—
	600				○									111	115	118	24.5	34.6	42.4	49.0	60.0	77.5	91.7	110	155	610	4.3	—
	800					○								111	115	117	32.7	46.2	56.5	65.3	80.0	103	122	146	206	700	5.0	—
	1000					○								111	115	117	40.8	57.7	70.7	81.7	100	129	153	183	258	∫	5.6	—
	1500						○							111	115	117	61.2	86.6	106	122	150	194	229	274	387	900	7.2	—
90	02									●	●	○	○	76	90	100	—	0.12	0.14	0.16	0.20	0.26	0.31	0.37	0.52	145	0.2	200
	03							○	○	●	●	○	○	76	90	100	—	0.17	0.21	0.24	0.30	0.39	0.46	0.55	0.77	150	0.2	200
	04							○	○	●	●	○	○	77	90	100	—	0.23	0.28	0.33	0.40	0.52	0.61	0.73	1.03	∫	0.3	150
	05							○	○	●	●	○	○	77	90	100	—	0.29	0.35	0.41	0.50	0.65	0.76	0.91	1.29	170	0.3	150
	07							○	○	●	●	○	○	78	90	100	—	0.40	0.49	0.57	0.70	0.90	1.07	1.28	1.81		0.4	150
	10							○	○		●		○	78	90	99	0.41	0.58	0.71	0.82	1.00	1.29	1.53	1.83	2.58	∫	0.5	100
	15	●	●					○	○		●		○	79	90	99	0.61	0.87	1.06	1.23	1.50	1.94	2.29	2.74	3.87		0.6	100
	20	●	●					○	○		●		○	79	90	98	0.82	1.15	1.41	1.63	2.00	2.58	3.06	3.65	5.16		0.7	50
	30	●	●					○	○		●		○	80	90	97	1.23	1.73	2.12	2.45	3.00	3.88	4.58	5.48	7.75	280	0.9	50
	40	○	○					○	○		○		○	81	90	97	1.63	2.31	2.83	3.27	4.00	5.16	6.11	7.30	10.3		1.1	—
	50	○	○					○	○		○		○	81	90	97	2.04	2.89	3.54	4.08	5.00	6.46	7.64	9.13	12.9		1.2	—
	60	○	○											82	90	96	2.45	3.46	4.24	4.90	6.00	7.75	9.17	11.0	15.5		1.3	—
	80	○	○											82	90	96	3.27	4.62	5.66	6.53	8.00	10.3	12.2	14.6	20.6		1.5	—
	100	○												82	90	96	4.08	5.77	7.07	8.17	10.0	12.9	15.3	18.3	25.8	∫	1.7	—
	120	○												83	90	95	4.90	6.93	8.49	9.80	12.0	15.5	18.3	21.9	31.0		2.0	—
	140		○											83	90	95	5.72	8.08	9.90	11.4	14.0	18.1	21.4	25.6	36.1		2.2	—
	170		○											83	90	95	6.94	9.82	12.0	13.9	17.0	22.0	26.0	31.1	43.9		2.4	—
	200		○											84	90	95	8.16	11.5	14.1	16.3	20.0	25.8	30.6	36.5	51.6	540	2.6	—
	230		○											84	90	94	9.39	13.3	16.3	18.8	23.0	29.7	35.1	42.0	59.4		2.8	—
	260		○											84	90	94	10.6	15.0	18.4	21.2	26.0	33.6	39.7	47.5	67.1	∫	3.1	—
	300		○											84	90	94	12.2	17.3	21.2	24.5	30.0	38.7	45.8	54.8	77.5		3.4	—
	400			○										85	90	94	16.3	23.1	28.3	32.7	40.0	51.6	61.1	73.0	103	580	3.8	—
	500				○									85	90	93	20.4	28.9	35.4	40.8	50.0	64.6	76.4	91.3	129	∫	4.2	—
	600				○									86	90	93	24.5	34.6	42.4	49.0	60.0	77.5	91.7	110	155		4.7	—
	800				○									86	90	93	32.7	46.2	56.5	65.3	80.0	103	122	146	206	700	5.4	—
	900					○								86	90	92	36.7	52.0	63.6	73.5	90.0	116	137	164	232	750	5.7	—
	1000					○								86	90	92	40.8	57.7	70.7	81.7	100	129	153	183	258	∫	6.0	—
	1200					○								86	90	92	49.0	69.3	84.9	98.0	120	155	183	219	310		6.6	—
	1500						○							86	90	92	61.2	86.6	106	122	150	194	229	274	387	950	7.2	—

●: Available with/without strainer ○: Available without strainer ⬚: Precision-molded stainless steel type available (see page 20)

One-piece Structure Standard Flat Spray Nozzles
VVP/VP series

Spray angle code	Spray capacity code	Pipe connection size: VVP All metal R1/8	VVP All metal R1/4	VVP All metal R3/8	VVP All metal R1/2	VVP All metal R3/4	VVP All metal R1	VVP All plastic R1/8	VVP All plastic R1/4	VP Metal R1/8	VP Metal R1/4	VP CER-TIIM® R1/8	VP CER-TIIM® R1/4	Spray angle (°) 0.15 MPa	0.3 MPa	0.7 MPa	Spray capacity (ℓ/min) 0.05 MPa	0.1 MPa	0.15 MPa	0.2 MPa	0.3 MPa	0.5 MPa	0.7 MPa	1 MPa	2 MPa	Mean drop. dia. (μm)	Free pass. dia. (mm)	Strainer mesh size
80	02									●	●	○	○	67	80	90	—	0.12	0.14	0.16	0.20	0.26	0.31	0.37	0.52	150	0.2	200
	03									●	●	○	○	67	80	90	—	0.17	0.21	0.24	0.30	0.39	0.46	0.55	0.77	∫	0.3	150
	04									●	●	○	○	67	80	90	—	0.23	0.28	0.33	0.40	0.52	0.61	0.73	1.03		0.3	150
	05	●	●					○	○	●	●	○	○	67	80	90	—	0.29	0.35	0.41	0.50	0.65	0.76	0.91	1.29	180	0.3	150
	07	●	⬚							●	●	○	○	68	80	89	—	0.40	0.49	0.57	0.70	0.90	1.07	1.28	1.81		0.4	150
	10	●						○	○		●		○	68	80	89	0.41	0.58	0.71	0.82	1.00	1.29	1.53	1.83	2.58	∫	0.5	100
	15										●		○	69	80	88	0.61	0.87	1.06	1.23	1.50	1.94	2.29	2.74	3.87		0.7	50
	20	●	●								●		○	69	80	88	0.82	1.15	1.41	1.63	2.00	2.58	3.06	3.65	5.16		0.8	50
	30	○	○								○		○	70	80	87	1.23	1.73	2.12	2.45	3.00	3.88	4.58	5.48	7.75	290	1.0	—
	40	○	○					○	○		○		○	71	80	87	1.63	2.31	2.83	3.27	4.00	5.16	6.11	7.30	10.3		1.2	—
	50										○		○	71	80	86	2.04	2.89	3.54	4.08	5.00	6.46	7.64	9.13	12.9		1.4	—
	60										○		○	72	80	86	2.45	3.46	4.24	4.90	6.00	7.75	9.17	11.0	15.5	∫	1.5	—
	80	○	○											72	80	86	3.27	4.62	5.66	6.53	8.00	10.3	12.2	14.6	20.6		1.7	—
	100	○												72	80	85	4.08	5.77	7.07	8.17	10.0	12.9	15.3	18.3	25.8		1.8	—
	120	○												73	80	85	4.90	6.93	8.49	9.80	12.0	15.5	18.3	21.9	31.0		2.1	—
	200		○											74	80	85	8.16	11.5	14.1	16.3	20.0	25.8	30.6	36.5	51.6	550	2.9	—
	300		○											74	80	84	12.2	17.3	21.2	24.5	30.0	38.7	45.8	54.8	77.5	570	3.7	—
	400			○										75	80	83	16.3	23.1	28.3	32.7	40.0	51.6	61.1	73.0	103	600	4.1	—
	500			○										75	80	83	20.4	28.9	35.4	40.8	50.0	64.6	76.4	91.3	129		4.8	—
	600				○									76	80	83	24.5	34.6	42.4	49.0	60.0	77.5	91.7	110	155	∫	5.1	—
	800				○									76	80	82	32.7	46.2	56.5	65.3	80.0	103	122	146	206		6.1	—
	1000					○								76	80	82	40.8	57.7	70.7	81.7	100	129	153	183	258	850	6.2	—
65	02									●	●	○	○	52	65	75	—	0.12	0.14	0.16	0.20	0.26	0.31	0.37	0.52	155	0.2	200
	03	⬚						○	○	●	●	○	○	52	65	75	—	0.17	0.21	0.24	0.30	0.39	0.46	0.55	0.77	160	0.3	150
	04							○	○	●	●	○	○	52	65	75	—	0.23	0.28	0.33	0.40	0.52	0.61	0.73	1.03	∫	0.3	150
	05							○	○	●	●	○	○	52	65	74	—	0.29	0.35	0.41	0.50	0.65	0.76	0.91	1.29	190	0.4	150
	07							○	○	●	●	○	○	53	65	74	—	0.40	0.49	0.57	0.70	0.90	1.07	1.28	1.81		0.5	100
	10	⬚						○	○		●		○	54	65	73	0.41	0.58	0.71	0.82	1.00	1.29	1.53	1.83	2.58	∫	0.6	100
	15	●	●					○	○		●		○	54	65	73	0.61	0.87	1.06	1.23	1.50	1.94	2.29	2.74	3.87		0.8	50
	20	●	●					○	○		●		○	55	65	72	0.82	1.15	1.41	1.63	2.00	2.58	3.06	3.65	5.16	310	0.9	50
	30	○	○					○	○		○		○	56	65	72	1.23	1.73	2.12	2.45	3.00	3.88	4.58	5.48	7.75		1.1	—
	40	○	○					○	○		○		○	56	65	71	1.63	2.31	2.83	3.27	4.00	5.16	6.11	7.30	10.3		1.3	—
	50	○	○					○	○		○		○	57	65	71	2.04	2.89	3.54	4.08	5.00	6.46	7.64	9.13	12.9		1.5	—
	60	○	○								○		○	57	65	71	2.45	3.46	4.24	4.90	6.00	7.75	9.17	11.0	15.5		1.6	—
	80	○	○					○	○		○		○	58	65	71	3.27	4.62	5.66	6.53	8.00	10.3	12.2	14.6	20.6	∫	1.9	—
	100	○												58	65	70	4.08	5.77	7.07	8.17	10.0	12.9	15.3	18.3	25.8		2.1	—
	120	○												58	65	70	4.90	6.93	8.49	9.80	12.0	15.5	18.3	21.9	31.0		2.3	—
	140		○											59	65	69	5.72	8.08	9.90	11.4	14.0	18.1	21.4	25.6	36.1		2.5	—
	170		○											59	65	69	6.94	9.82	12.0	13.9	17.0	22.0	26.0	31.1	43.9		2.8	—
	200		○											59	65	69	8.16	11.5	14.1	16.3	20.0	25.8	30.6	36.5	51.6	580	3.0	—
	300		○											60	65	69	12.2	17.3	21.2	24.5	30.0	38.7	45.8	54.8	77.5	650	3.9	—
	400			○										60	65	68	16.3	23.1	28.3	32.7	40.0	51.6	61.1	73.0	103		4.7	—
	500			○										61	65	67	20.4	28.9	35.4	40.8	50.0	64.6	76.4	91.3	129		5.3	—
	600				○									61	65	67	24.5	34.6	42.4	49.0	60.0	77.5	91.7	110	155	∫	5.7	—
	800				○									62	65	67	32.7	46.2	56.5	65.3	80.0	103	122	146	206		6.5	—
	1000					○								62	65	66	40.8	57.7	70.7	81.7	100	129	153	183	258		7.3	—
	1500					○								62	65	66	61.2	86.6	106	122	150	194	229	274	387	1,000	9.0	—
50	03										●		○	37	50	60	—	0.17	0.21	0.24	0.30	0.39	0.46	0.55	0.77	180	0.3	150
	04										●		○	37	50	60	—	0.23	0.28	0.33	0.40	0.52	0.61	0.73	1.03	∫	0.4	150
	05	●	●								●		○	38	50	59	—	0.29	0.35	0.41	0.50	0.65	0.76	0.91	1.29	210	0.4	150
	07	●	●								●		○	38	50	58	—	0.40	0.49	0.57	0.70	0.90	1.07	1.28	1.81		0.5	100
	10	●	●								●		○	40	50	58	0.41	0.58	0.71	0.82	1.00	1.29	1.53	1.83	2.58	∫	0.6	100
	15										●		○	40	50	57	0.61	0.87	1.06	1.23	1.50	1.94	2.29	2.74	3.87		0.8	50
	20	○	○								○		○	41	50	57	0.82	1.15	1.41	1.63	2.00	2.58	3.06	3.65	5.16		1.0	—
	30	○	○					○	○		○		○	42	50	56	1.23	1.73	2.12	2.45	3.00	3.88	4.58	5.48	7.75	340	1.2	—
	40	○	○								○		○	42	50	56	1.63	2.31	2.83	3.27	4.00	5.16	6.11	7.30	10.3		1.4	—
	50										○		○	43	50	55	2.04	2.89	3.54	4.08	5.00	6.46	7.64	9.13	12.9	∫	1.6	—
	60										○		○	43	50	55	2.45	3.46	4.24	4.90	6.00	7.75	9.17	11.0	15.5		1.7	—
	80	○	○								○		○	43	50	55	3.27	4.62	5.66	6.53	8.00	10.3	12.2	14.6	20.6		2.0	—
	120	○												44	50	54	4.90	6.93	8.49	9.80	12.0	15.5	18.3	21.9	31.0	550	2.5	—
	200		○											45	50	53	8.16	11.5	14.1	16.3	20.0	25.8	30.6	36.5	51.6	640	3.3	—
	300		○											45	50	53	12.2	17.3	21.2	24.5	30.0	38.7	45.8	54.8	77.5		4.2	—
	400			○										46	50	52	16.3	23.1	28.3	32.7	40.0	51.6	61.1	73.0	103	∫	4.9	—
	500			○										46	50	52	20.4	28.9	35.4	40.8	50.0	64.6	76.4	91.3	129		5.6	—
	600				○									47	50	52	24.5	34.6	42.4	49.0	60.0	77.5	91.7	110	155	750	6.1	—
	800				○									47	50	51	32.7	46.2	56.5	65.3	80.0	103	122	146	206	∫	7.1	—
	1000					○								47	50	51	40.8	57.7	70.7	81.7	100	129	153	183	258	1,000	7.9	—
	1500					○								48	50	51	61.2	86.6	106	122	150	194	229	274	387	1,100	9.7	—

●: Available with/without strainer ○: Available without strainer ⬚: Precision-molded stainless steel type available (see page 20)

Spray angle code	Spray capacity code	Pipe connection size: VVP All metal R1/8	VVP All metal R1/4	VVP All metal R3/8	VVP All metal R1/2	VVP All metal R3/4	VVP All metal R1	VVP All plastic R1/8	VVP All plastic R1/4	VP Metal R1/8	VP Metal R1/4	VP CER-TIIM® R1/8	VP CER-TIIM® R1/4	Spray angle (°) 0.15 MPa	0.3 MPa	0.7 MPa	Spray capacity (ℓ/min) 0.05 MPa	0.1 MPa	0.15 MPa	0.2 MPa	0.3 MPa	0.5 MPa	0.7 MPa	1 MPa	2 MPa	Mean drop. dia. (μm)	Free pass. dia. (mm)	Strainer mesh size
40	05	●	●											30	40	48	—	0.29	0.35	0.41	0.50	0.65	0.76	0.91	1.29	230	0.4	150
	07	●	●											30	40	48	—	0.40	0.49	0.57	0.70	0.90	1.07	1.28	1.81	∫	0.5	100
	10	●	●											31	40	47	0.41	0.58	0.71	0.82	1.00	1.29	1.53	1.83	2.58		0.7	50
	20	○	○											32	40	46	0.82	1.15	1.41	1.63	2.00	2.58	3.06	3.65	5.16	380	1.0	—
	30	○	○											33	40	46	1.23	1.73	2.12	2.45	3.00	3.88	4.58	5.48	7.75		1.3	—
	40	○	○											33	40	45	1.63	2.31	2.83	3.27	4.00	5.16	6.11	7.30	10.3	∫	1.5	—
	80	○	○											34	40	44	3.27	4.62	5.66	6.53	8.00	10.3	12.2	14.6	20.6		2.1	—
	120	○												35	40	44	4.90	6.93	8.49	9.80	12.0	15.5	18.3	21.9	31.0		2.8	—
	200		○											35	40	43	8.16	11.5	14.1	16.3	20.0	25.8	30.6	36.5	51.6	710	3.5	—
	300		○											36	40	42	12.2	17.3	21.2	24.5	30.0	38.7	45.8	54.8	77.5	800	4.5	—
	400			○										36	40	42	16.3	23.1	28.3	32.7	40.0	51.6	61.1	73.0	103	∫	5.3	—
	500			○										37	40	42	20.4	28.9	35.4	40.8	50.0	64.6	76.4	91.3	129	850	5.8	—
	600				○									37	40	42	24.5	34.6	42.4	49.0	60.0	77.5	91.7	110	155	∫	6.6	—
	800				○									37	40	41	32.7	46.2	56.5	65.3	80.0	103	122	146	206		7.4	—
	1000					○								38	40	41	40.8	57.7	70.7	81.7	100	129	153	183	258	1,100	8.3	—
	1500					○								38	40	41	61.2	86.6	106	122	150	194	229	274	387	1,200	10.3	—
25	05	●	●											18	25	32	—	0.29	0.35	0.41	0.50	0.65	0.76	0.91	1.29	270	0.5	100
	07	●	●											18	25	32	—	0.40	0.49	0.57	0.70	0.90	1.07	1.28	1.81	∫	0.6	100
	15	○	○											19	25	31	0.61	0.87	1.06	1.23	1.50	1.94	2.29	2.74	3.87		1.0	—
	30	○	○											19	25	30	1.23	1.73	2.12	2.45	3.00	3.88	4.58	5.48	7.75	440	1.4	—
	40	○	○											19	25	30	1.63	2.31	2.83	3.27	4.00	5.16	6.11	7.30	10.3		1.7	—
	80	○	○											20	25	29	3.27	4.62	5.66	6.53	8.00	10.3	12.2	14.6	20.6	∫	2.3	—
	200		○											21	25	27	8.16	11.5	14.1	16.3	20.0	25.8	30.6	36.5	51.6	850	4.0	—
	300		○											21	25	27	12.2	17.3	21.2	24.5	30.0	38.7	45.8	54.8	77.5	950	4.9	—
15	05	●	●											9	15	22	—	0.29	0.35	0.41	0.50	0.65	0.76	0.91	1.29	310	0.5	100
	07	●	●											9	15	21	—	0.40	0.49	0.57	0.70	0.90	1.07	1.28	1.81	∫	0.7	50
	15	○	○											10	15	20	0.61	0.87	1.06	1.23	1.50	1.94	2.29	2.74	3.87		1.0	—
	30	○	○											10	15	19	1.23	1.73	2.12	2.45	3.00	3.88	4.58	5.48	7.75	510	1.5	—
	40	○	○											10	15	19	1.63	2.31	2.83	3.27	4.00	5.16	6.11	7.30	10.3	∫	1.7	—
	80	○	○											11	15	18	3.27	4.62	5.66	6.53	8.00	10.3	12.2	14.6	20.6		2.4	—
	200		○											11	15	17	8.16	11.5	14.1	16.3	20.0	25.8	30.6	36.5	51.6	1,000	4.0	—
	300		○											12	15	17	12.2	17.3	21.2	24.5	30.0	38.7	45.8	54.8	77.5	1,100	5.0	—

●: Available with/without strainer ○: Available without strainer

■ VVP series (Precision-molded stainless steel, small spray capacity)

Spray angle code	Spray capacity code	Pipe connection size R1/8	R1/4	Spray angle (°) 0.15 MPa	0.3 MPa	0.7 MPa	Spray capacity (ℓ/min) 0.05 MPa	0.1 MPa	0.15 MPa	0.2 MPa	0.3 MPa	0.5 MPa	0.7 MPa	1 MPa	2 MPa	Mean drop. dia. (μm)	Free pass. dia. (mm)	Strainer mesh size
115	03	●	●	101	115	124	—	—	0.21	0.24	0.30	0.39	0.46	0.55	0.77	140	0.2	200
	04	●	●	102	115	124	—	—	0.28	0.33	0.40	0.52	0.61	0.73	1.03		0.2	200
	05	●	●	102	115	124	—	0.29	0.35	0.41	0.50	0.65	0.76	0.91	1.29	∫	0.3	150
	07	●	●	103	115	124	—	0.40	0.49	0.57	0.70	0.90	1.07	1.28	1.81		0.3	150
	10	●	●	103	115	124	0.41	0.58	0.71	0.82	1.00	1.29	1.53	1.83	2.58	270	0.4	150
90	03	●	●	76	90	100	—	—	0.21	0.24	0.30	0.39	0.46	0.55	0.77	150	0.2	200
	04	●	●	77	90	100	—	—	0.28	0.33	0.40	0.52	0.61	0.73	1.03		0.3	150
	05	●	●	77	90	100	—	0.29	0.35	0.41	0.50	0.65	0.76	0.91	1.29	∫	0.3	150
	07	●	●	78	90	100	—	0.40	0.49	0.57	0.70	0.90	1.07	1.28	1.81		0.4	150
	10	●	●	78	90	99	0.41	0.58	0.71	0.82	1.00	1.29	1.53	1.83	2.58	280	0.5	100
80	07		●	68	80	89	—	0.40	0.49	0.57	0.70	0.90	1.07	1.28	1.81	180 ∫ 290	0.4	150
	10		●	68	80	89	0.41	0.58	0.71	0.82	1.00	1.29	1.53	1.83	2.58		0.5	100
65	03	●	●	52	65	75	—	—	0.21	0.24	0.30	0.39	0.46	0.55	0.77	160	0.3	150
	04	●	●	52	65	75	—	—	0.28	0.33	0.40	0.52	0.61	0.73	1.03		0.3	150
	05	●	●	52	65	74	—	0.29	0.35	0.41	0.50	0.65	0.76	0.91	1.29	∫	0.4	150
	07	●	●	53	65	74	—	0.40	0.49	0.57	0.70	0.90	1.07	1.28	1.81		0.5	100
	10	●	●	54	65	73	0.41	0.58	0.71	0.82	1.00	1.29	1.53	1.83	2.58	310	0.6	100

●: Available with/without strainer

How to order

Please inquire or order for a specific nozzle using this coding system.

①VVP/VP series

〈Example〉 1/4M VVP 11515 S303W

1/4M	VVP	115	15	S303	W
Pipe conn. size*4	Series	Spray angle code	Spray capacity code	Material*5	Strainer
1/8M ∫ 1M	VVP VP	115 ∫ 15	02 ∫ 1500	S303 B TPVDF PP-IN	W (with strainer) (Blank denotes "without strainer")

②VVP series (Precision-molded stainless steel, small spray capacity)

〈Example〉 1/4M VVP 6507 S316L-IN + WS303

1/4M	VVP	65	07	S316-IN +	W	S303
Pipe conn. size*4		Spray angle code	Spray capacity code		Strainer	Strainer material
1/8M 1/4M		115 ∫ 65	03 04 05 07 10		W (with strainer) (Blank denotes "without strainer")	S303 S316

*4) "M" indicates male thread ("R" of the ISO standard) and "F" indicates female thread ("Rc" of the ISO standard), e.g. 1/8M = R1/8.
*5) TPVDF is only for VP series. PP-IN is only for VVP series.