CONO AMPIO SOTTO PRESSIONE
WIDE CONE UNDER PRESSURE
CONO GRAN ANGÚLO BAJO PRESIÓN

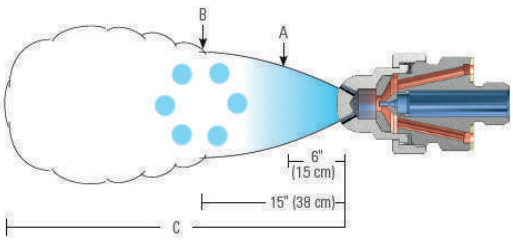

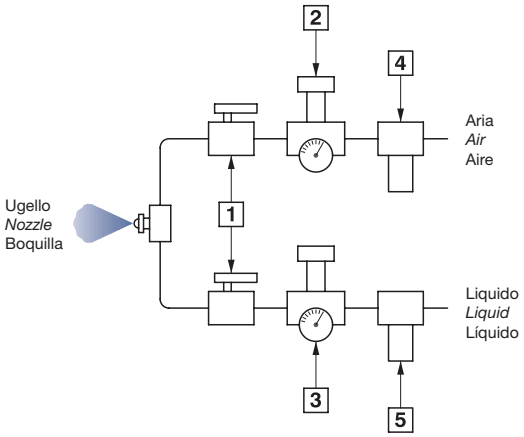

La forma del getto è indicata in figura.
Le sezioni A - B – C indicano i diametri dello spruzzo alle varie distanze. Oltre C il getto assume una forma turbolenta.

Spray pattern is shown in picture. Sections A - B - C are the spray diameters at the different distances. Beyond C the spray becomes turbulent.

La forma del chorro se indica en el esquema. Las secciones A- B – C indican el diámetro del chorro a varias distancias del orificio. Más allá de la distancia C, el chorro se vuelve turbulento.

Spray set-up	*Liquid Capacity (liters per hour) and Air Capacity (liters per minute)*															*Spray dimensions Ø*				
	Liquid Pressure																			
	0,7 Bar			1,5 Bar			2 Bar			3 Bar			4 Bar							
	Air Press. (bar)	AIR l/min	Liquid l/h	Air Press. (bar)	AIR l/min	Liquid l/h	Air Press. (bar)	AIR l/min	Liquid l/h	Air Press. (bar)	AIR l/min	Liquid l/h	Air Press. (bar)	AIR l/min	Liquid l/h	Air bar	H_2O bar	A cm	B cm	C m
B2 - P21	0.6	5.3	10.2	1.1	8.1	13.3	1.5	8.1	16	2.4	8.9	22	3.1	10.5	24	0.7	0.7	14	18	1.5
	0.7	4.3	12.2	1.3	7.0	15	1.8	6.6	21	2.7	8.1	26	3.4	9.7	28	1.4	1.5	15	19	1.8
	0.85	3.0	14.2	1.4	6.4	17	2.1	4.9	25	3.0	6.4	30	3.9	7.8	36	1.8	2.0	16	20	2.1
	1.0	1.7	17.0	1.5	5.5	19	2.4	3.2	29	3.2	4.9	34	4.2	6.1	42	3.0	3.0	16	20	2.7
				1.7	4.5	22				3.4	4.2	37	4.6	4.4	47	3.9	4.0	19	23	4.0
				1.8	3.5	24				3.5	3.4	40	4.9	2.8	54					
B5 - P22	0.85	7.0	50	1.7	13.2	68	2.0	18.5	68	2.8	25.0	84	3.7	31	96					
	1.0	2.1	62	1.8	9.8	79	2.1	15.1	76	3.0	22.0	92	3.8	28	105	0.85	0.7	18	24	1.8
							2.2	11.7	85	3.1	18.5	101	3.9	26	113	1.7	1.5	19	25	2.4
										3.2	15.1	109	4.1	23	122	2.1	2.0	19	25	3.2
										3.4	12.1	119	4.2	20	130	3V?	3.0	20	26	4.1
										3.5	9.1	130	4.6	13.6	153	4.1	4.0	21	28	5.9
										3.7	6.1	142	4.9	6.8	183					
B6 - P22	0.7	24.0	32	1.4	43	37	2.1	33	68	2.8	52	65	3.7	63	68					
	0.85	13.6	44	1.5	35	49	2.2	26	78	3.0	46	76	3.8	58	79	0.85	0.7	19	25	2.1
	1.0	7.6	57	1.7	28	81	2.4	18.9	89	3.1	39	87	3.9	52	101	1.5	1.5	20	27	3.2
				1.8	21	71	2.5	11.7	100	3.2	33	99	4.2	41	111	2.4	2.0	20	27	4.1
										3.4	26	110	4.6	27	138	3.2	3.0	20	28	5.0
										3.5	19.5	122	4.9	15.9	166	3.9	4.0	20	28	6.8
										3.7	13.2	133								
B6 - P23	1.3	36	85	2.1	57	116	3.1	53	156	4.2	64	197	5.6	74	245					
	1.5	29	102	2.4	51	130	3.2	50	163	4.9	51	230	6.0	68	260	2.0	0.7	20	25	5.5
	1.8	23	117	2.7	45	143	3.4	47	170	5.6	40	265	6.3	62	280	3.0	1.5	20	27	6.4
	2.0	19.7	125	3.0	39	157	3.5	45	177	6.0	34	285	8.7	56	295	3.9	2.0	22	28	8.2
	2.1	16.7	133	3.2	33	170	3.9	38	194	6.3	28	300	7.0	51	315	6.0	3.0	23	29	9.1
	2.3	14.0	142	3.5	26	185	4.8	25	230	6.7	22	320				6.3	4.0	24	32	10.4
	2.4	11.4	149	4.2	13.6	220	4.9	18.5	245	7.0	17.8	335								
B5 - P24	1.1	12.3	40	2.2	16.3	62	2.7	21.0	69	4.2	19.3	100	5.6	22	130					
	1.3	9.9	45	2.5	12.1	71	3.0	16.3	78	4.6	14.6	113	6.0	17.6	142	1.5	0.7	15	19	2.7
	1.4	7.9	50	2.8	8.9	79	3.2	12.3	86	4.9	10.8	124	6.3	14.0	152	3.0	1.5	16	20	4.6
	1.5	6.1	54	3.0	7.6	83	3.4	10.7	91	5.3	8.1	135	6.7	11.4	163	3.4	2.0	16	20	5.5
	1.7	4.9	58	3.1	6.4	87	3.5	9.3	94	5.6	6.2	146	7.0	9.1	174	5.3	3.0	18	22	7.3
	1.8	3.9	62	3.2	5.5	91	3.9	6.4	105	6.0	4.9	157				6.3	4.0	19	24	9.4
	2.0	3.1	67	3.4	4.7	95	4.2	4.7	115	6.3	4.0	167								
B8 - P25	1.7	25.0	156	3.0	39	230	3.4	50	150	4.6	62	320	6.0	93	395	2.0	0.7	24	33	5.5
	1.8	19.7	167	3.1	33	240	3.5	43	260	4.9	47	345	6.3	77	425	3.2	1.5	25	34	6.4
	2.0	15.1	178	3.2	27	255	3.7	41	275	5.3	36	375	6.7	62	460	3.9	2.0	28	37	7.3
	2.1	11.4	193	3.4	23	265	3.9	27	300	5.6	26	405	7.0	52	495	5.3	3.0	29	38	7.9
	2.3	7.6	205	3.5	18.5	280	4.1	23	310	6.0	18.9	435				6.3	4.0	33	42	9.8
				3.7	14.8	290	4.2	18.9	320	6.3	13.6	460								
							4.4	15.9	335											